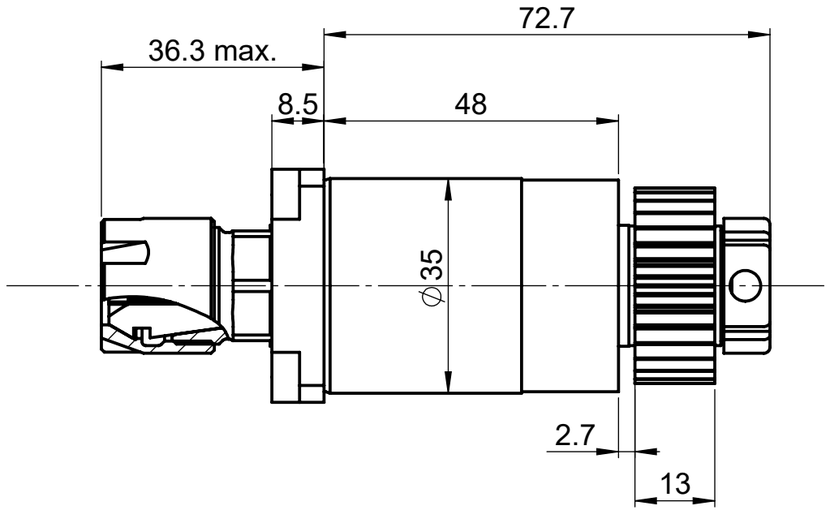


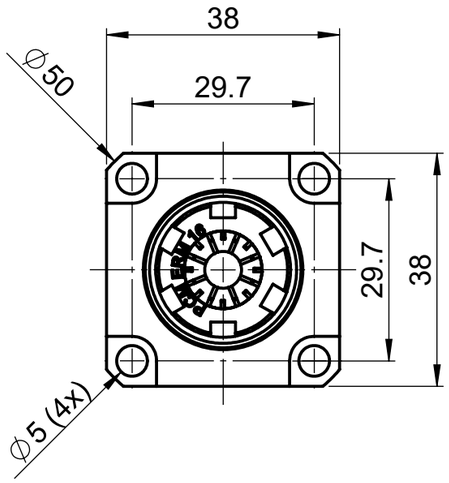


AXIAL TOOL HOLDER
ATTACHMENT : ER16
i (n1:n2) : 1 : 1
POSITION : BACK GANG TOOL POST
COOLANT : Non
MACHINE TYPES : HANWHA XDI20

INCLUDED :
Alu plug : 862-019-51-13
Clamping nut : 862-685-001
Fastening screw : 4x D912 M4x18

OPTIONS :
Clamp nuts, clamps, and wrench: see catalog «Accessories for tool holder».

| | | | | | |
|---|---|---|---|---|---|
| Porte-outil axial ER16 I/O =1/1 | © The reproduction, distribution and utilization of this document as well as the communication of its contents to others without express authorization is prohibited. Offenders will be held liable for the payment of damages. All rights reserved in the event of the grant of a patent, utility model or design. | | Star | | |
| | | Echelle 1:1 | Créé | Leibundgut | 09.06.2026 |
| | | | Validé | Nukic | 14.07.2026 |
| 1000-SC016-A00000-1S01 | Révision B | PCM be driven. | PCM Precision Tooling SA<br>+41 21 967 33 66<br>CH-1844 Villeneuve<br>www.pcm.ch | | |