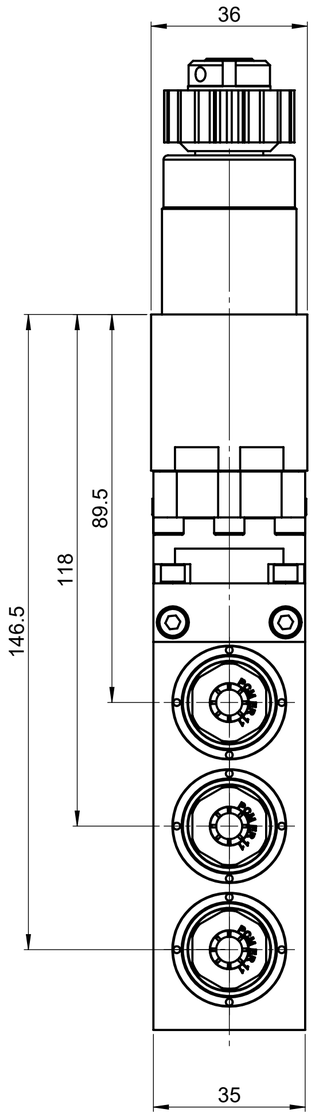

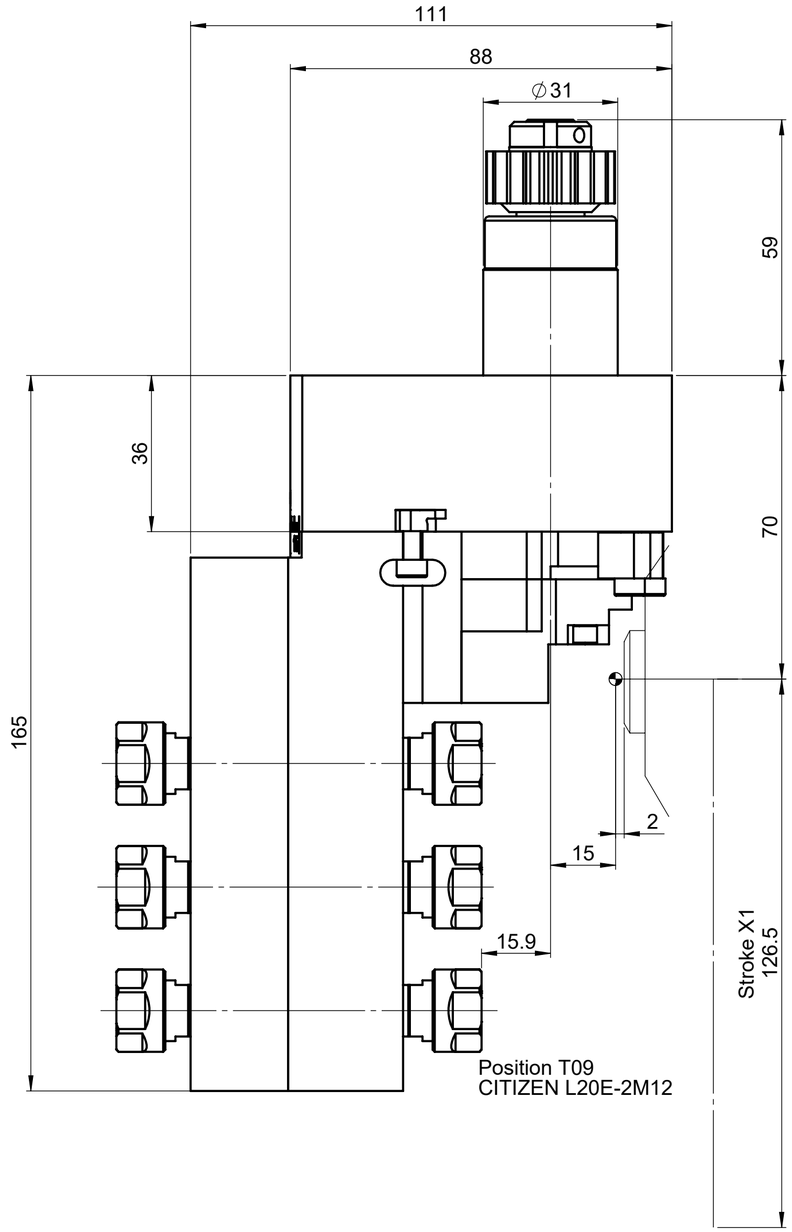

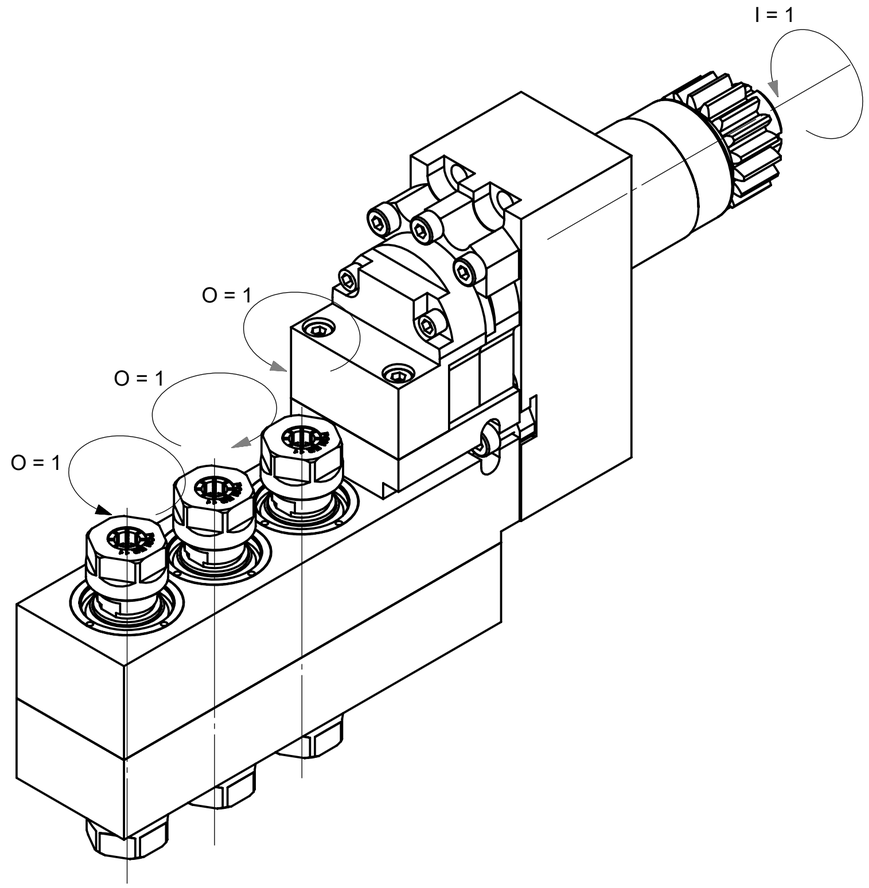

ANGLE ADJUSTABLE TOOL HOLDER
ATTACHEMENT: 3xER11 + 3xER11
i (n1:n2) : 1:1
DEGREE OF INCLINATION : ±30°
POSITION : Upper Gang tool post
COOLANT :NO
MACHINE TYPES : CITIZEN L20E-2M12, L32-1M8/9/10/12

COMMENTS:
For L32-1M8, with U31B block.

INCLUDED:
Clamping nut : 6x 871-685-021
Plug : 6x 862-019-51-12
Fastening screw : 1x D933 M6x16 + 1x D125 M6
Fastening screw : 4x D912 M5x40
Fork spanner : 1x 866-019-469-12

OPTIONS:
see catalog «Accessories for tool holder».

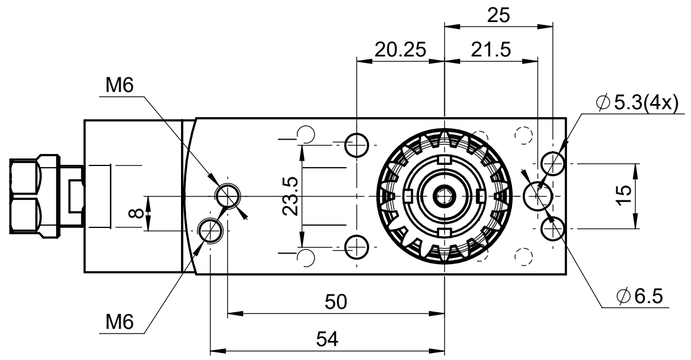

PORTE-OUTIL À ANGLE RÉGLABLE ER11 3x I/O=1/1	© The reproduction, distribution and utilization of this document as well as the communication of its contents to others without express authorization is prohibited. Offenders will be held liable for the payment of damages. All rights reserved in the event of the grant of a patent, utility model or design.	Echelle 1:1	CITIZEN		
			Créé	Pilet	25.06.2026
			Validé	Nukic	03.07.2026
GSA3207	Révision A	PCM be driven.	PCM Precision Tooling SA +41 21 967 33 66 CH-1844 Villeneuve www.pcm.ch		