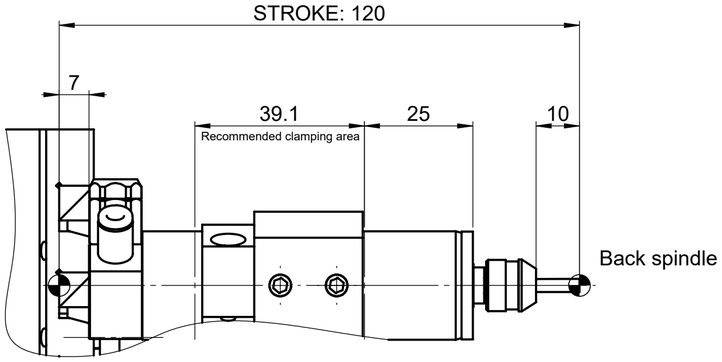

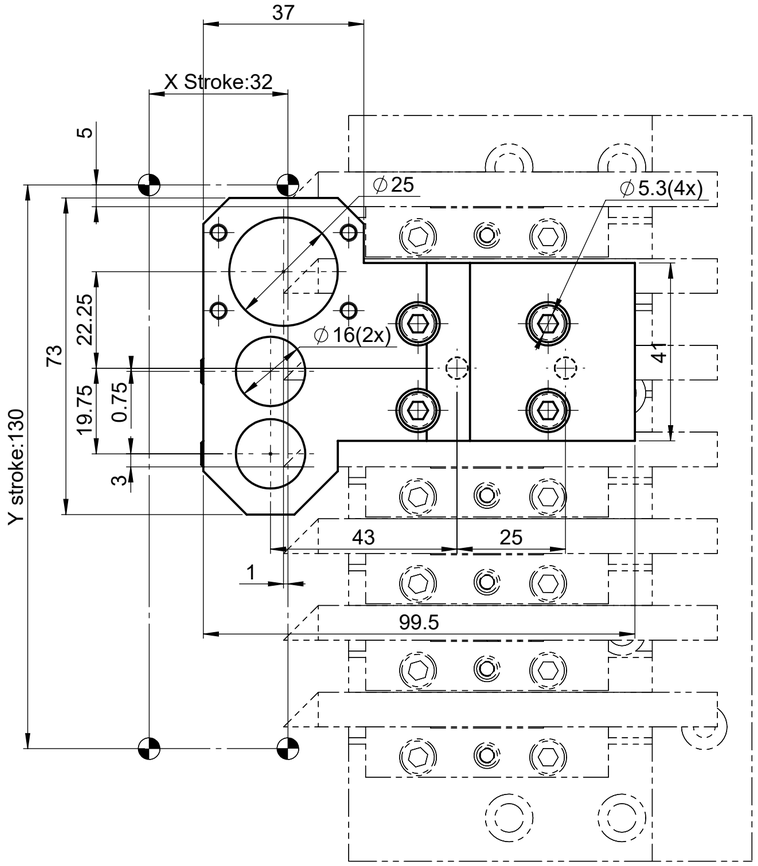

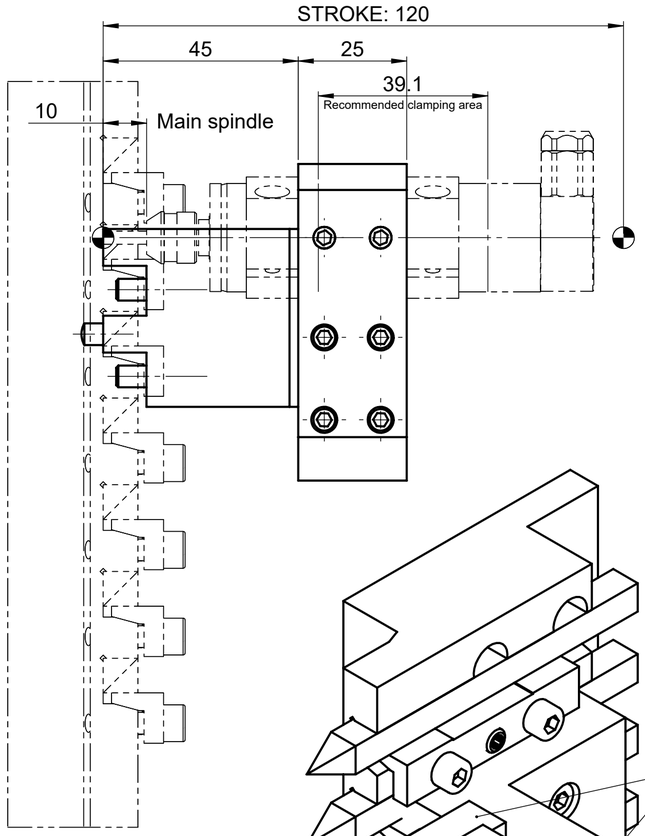

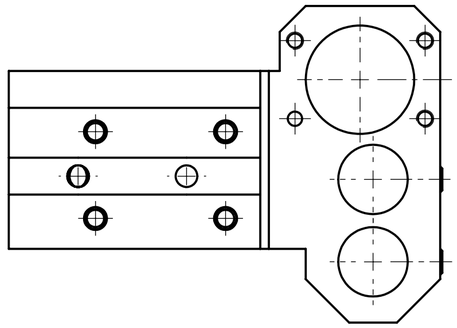

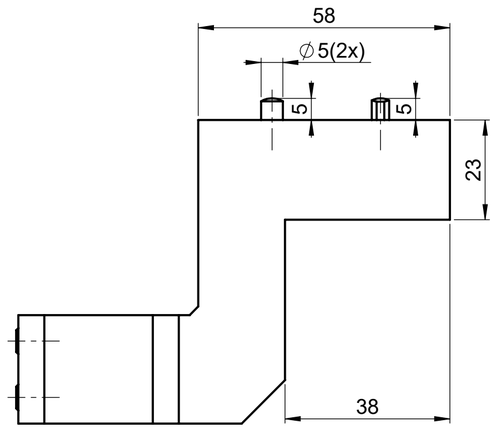

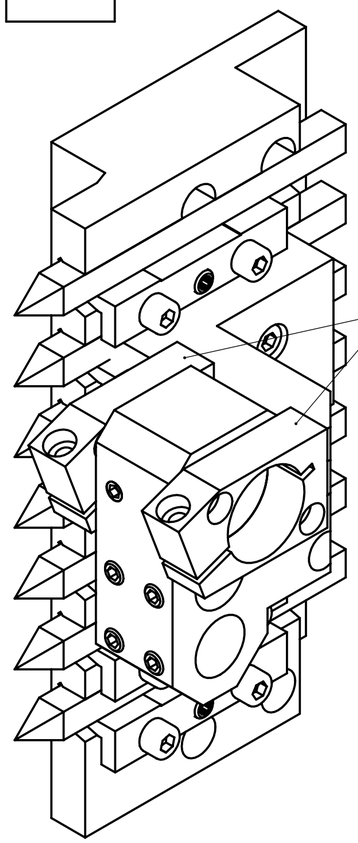

BORING BAR HOLDER
POSITION : Back Gang tool post
ATTACHMENT : 2x Ø16mm (standard) + 1x Ø25mm (standard)
COOLANT : No
MACHINE TYPES : TSUGAMI P013, P033, P053, P014, P034, P054

COMMENTS:
Please note the compatibility of the cutter carrier holder!
See "Table of boring bar holders Tsugami".
Flanges for HF spindles can be fitted.
Distance from reference: 45 mm.

INCLUDED:
Fastenig screw: 4x D912 M5x14

Porte-barre d'alésage 2xØ16 + Ø25	© The reproduction, distribution and utilization of this document as well as the communication of its contents to others without express authorization is prohibited. Offenders will be held liable for the payment of damages. All rights reserved in the event of the grant of a patent, utility model or design.		TSUGAMI		
		Echelle 1:1	Créé	Buccelloni	04.03.2024
			Validé	Pilet	24.09.2024
P03-GDF-816-II	Révision B	PCM be driven.	PCM Precision Tooling SA +41 21 967 33 66 CH-1844 Villeneuve www.pcm.ch		