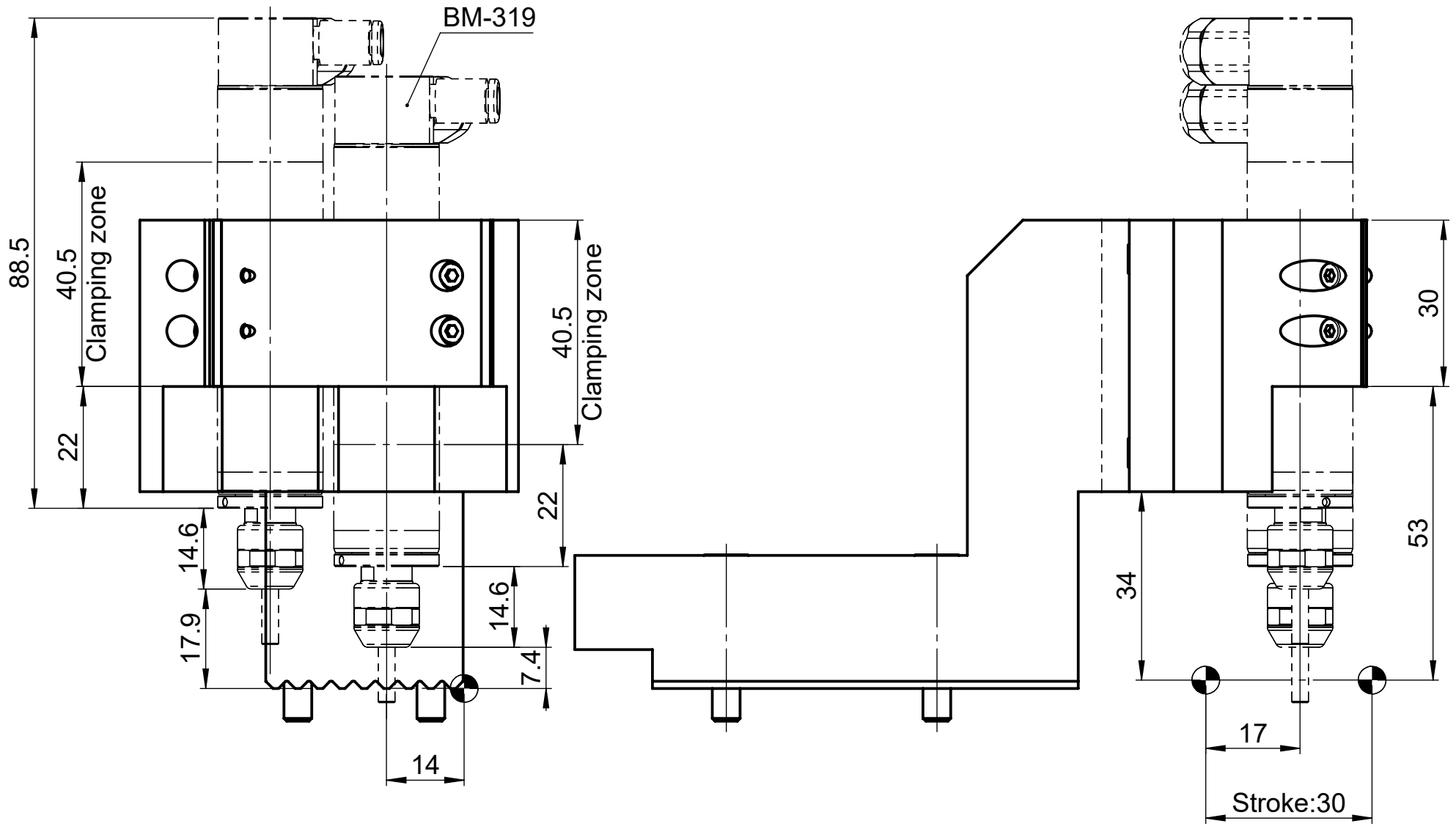

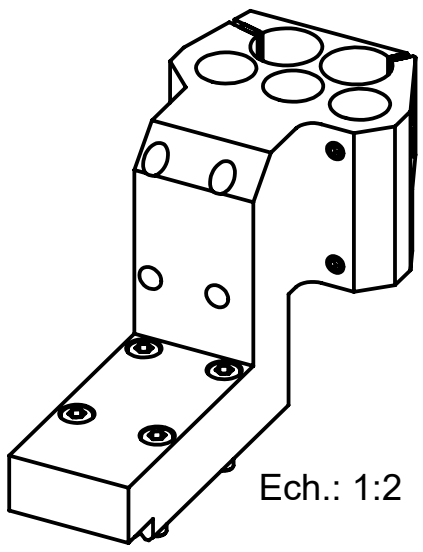

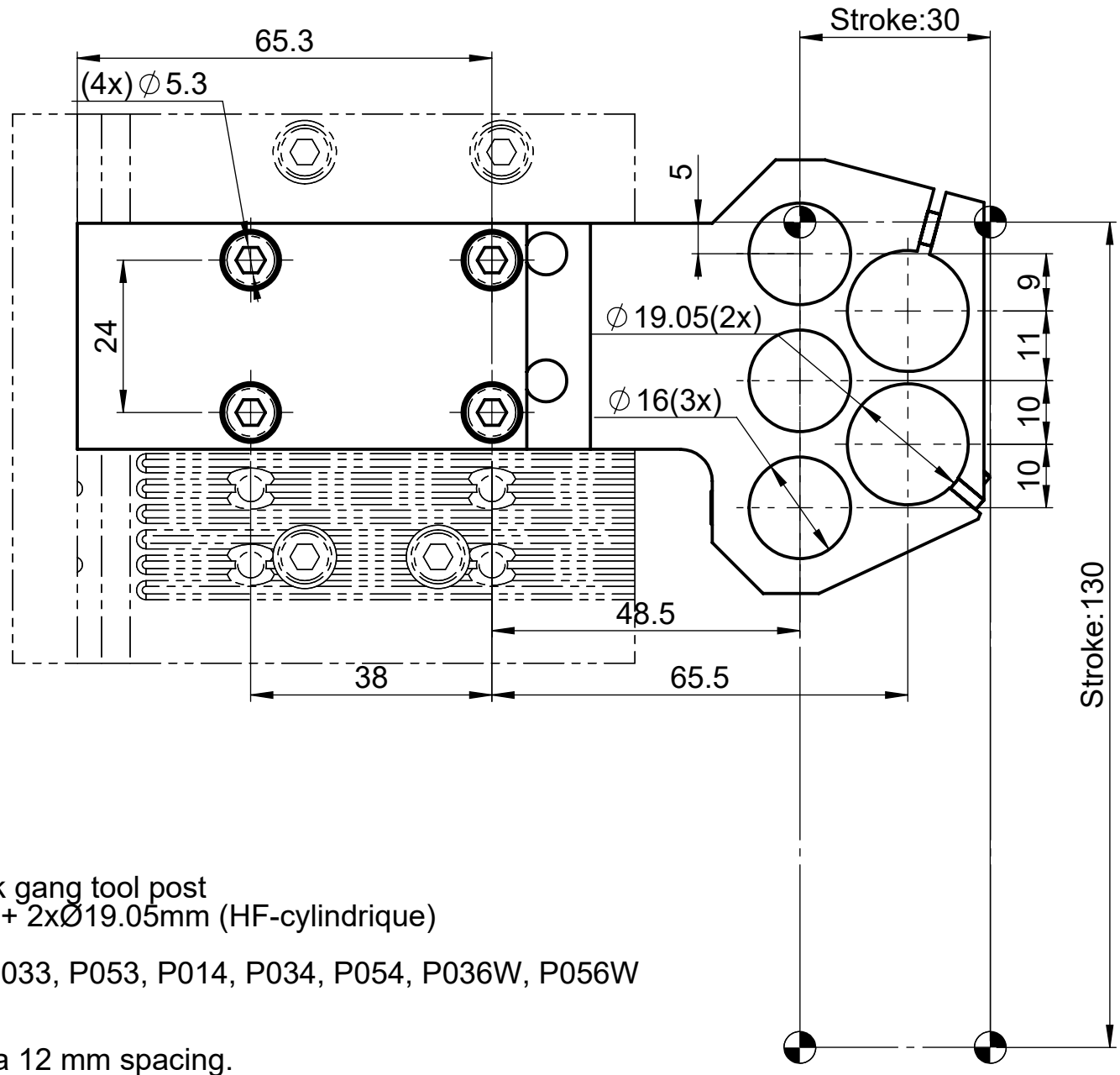

BORING BAR HOLDER
POSITION : Front gang tool post / Back gang tool post
ATTACHMENT : 3xØ16mm (standard) + 2xØ19.05mm (HF-cylindrique)
COOLANT : No
MACHINE TYPES : TSUGAMI P013, P033, P053, P014, P034, P054, P036W, P056W

COMMENTS:
Only for Applitec Modu-Line plate with a 12 mm spacing.
Ø19.05 are made for Nakanishi BM-319 high frequency spindle.

INCLUDED:
Fastening screw: 4x D912 M5x25

Porte-barre d'alésages 3xØ16 + 2xØ19.05	© The reproduction, distribution and utilization of this document as well as the communication of its contents to others without express authorization is prohibited. Offenders will be held liable for the payment of damages. All rights reserved in the event of the grant of a patent, utility model or design.	Echelle 1:1	TSUGAMI		
			Créé	Borgeaud	07.11.2022
			Validé	Buccelloni	15.11.2022
P03-GDF-519-HF-AP	Révision B	PCM be driven.	PCM Precision Tooling SA +41 21 967 33 66 CH-1844 Villeneuve www.pcm.ch		